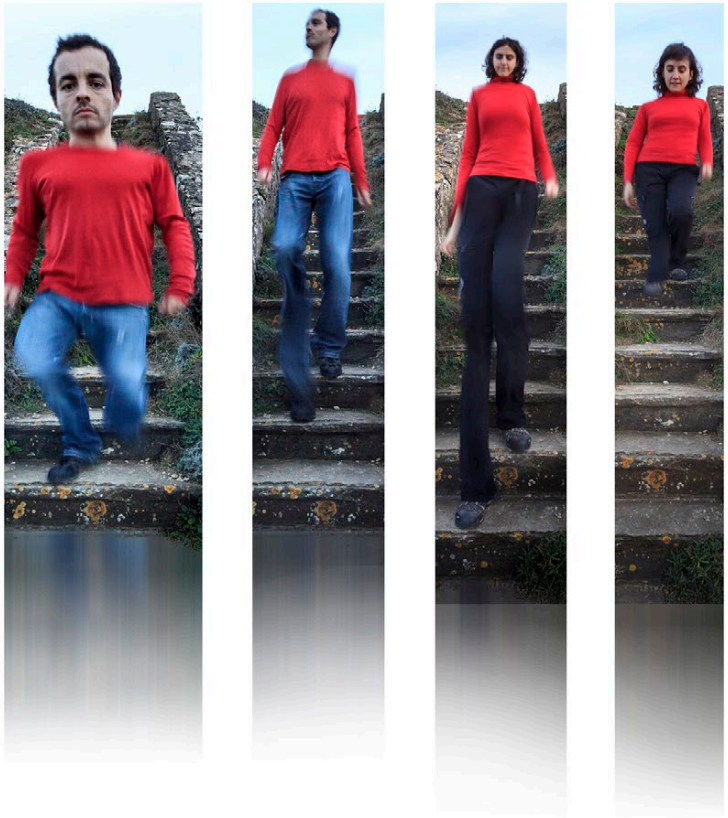

MOVESCAN

Fernando Álvarez Charro

DEVICE FOR CREATING EFFECTS
IN THE PHOTOGRAPHY
OF MOVING SUBJETS
AND NEW FORMS OF
LIGHT FILTERING

The invention presented here is a device attachable to camera lens capable of producing in conjunction with the camera and the lens, creative effects in the capture of moving subjects and new ways of filtering the light from a scene.

All photographs we will see next have been performed with the device and have no further processing, except minor tweaks of refinement and adjustments to improve overall brightness, contrast and saturation.
In any case, if you wanted to verify any particular photograph, I can provide the Raw file.

Full resolution photos:

http://www.flickr.com/photos/fernando-alvarez-charro/sets/72157634406885020/

Patent:

http://invenes.oepm.es/InvenesWeb/detalle?referencia=P201231891

Note: in the above link you can see the report on the state of the art (IET) in which machines cited invalidate allegedly the inventive activity, this is because the first version of the claims were drafted in a way too general thus emerged conflicts with other patents. This has already been fixed in the new set of claims filed that have not yet been published.

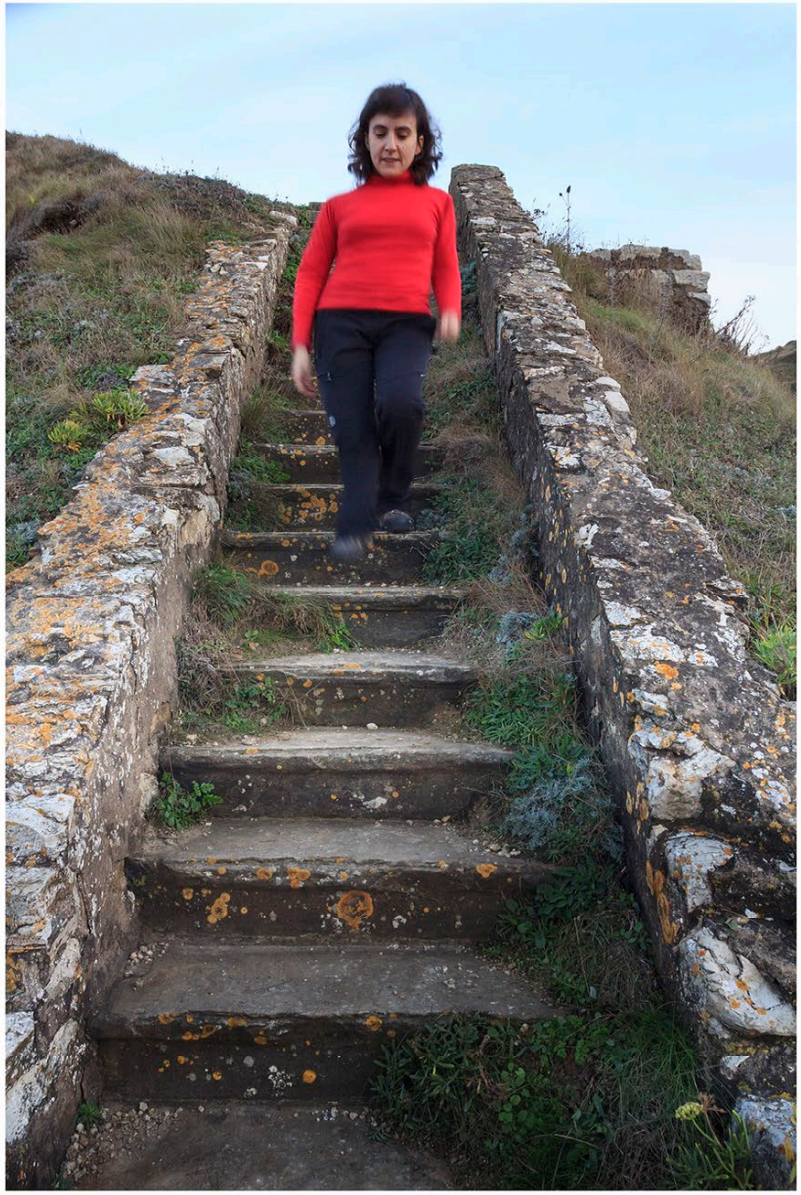

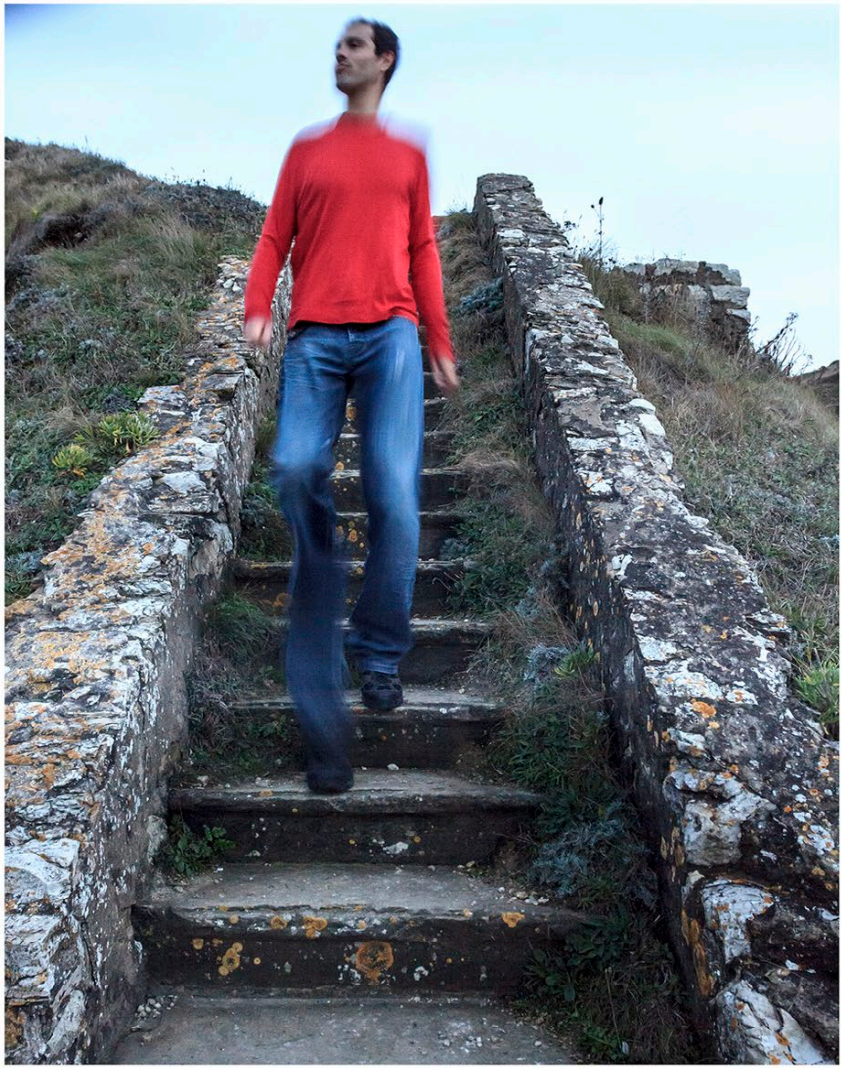


ONCE

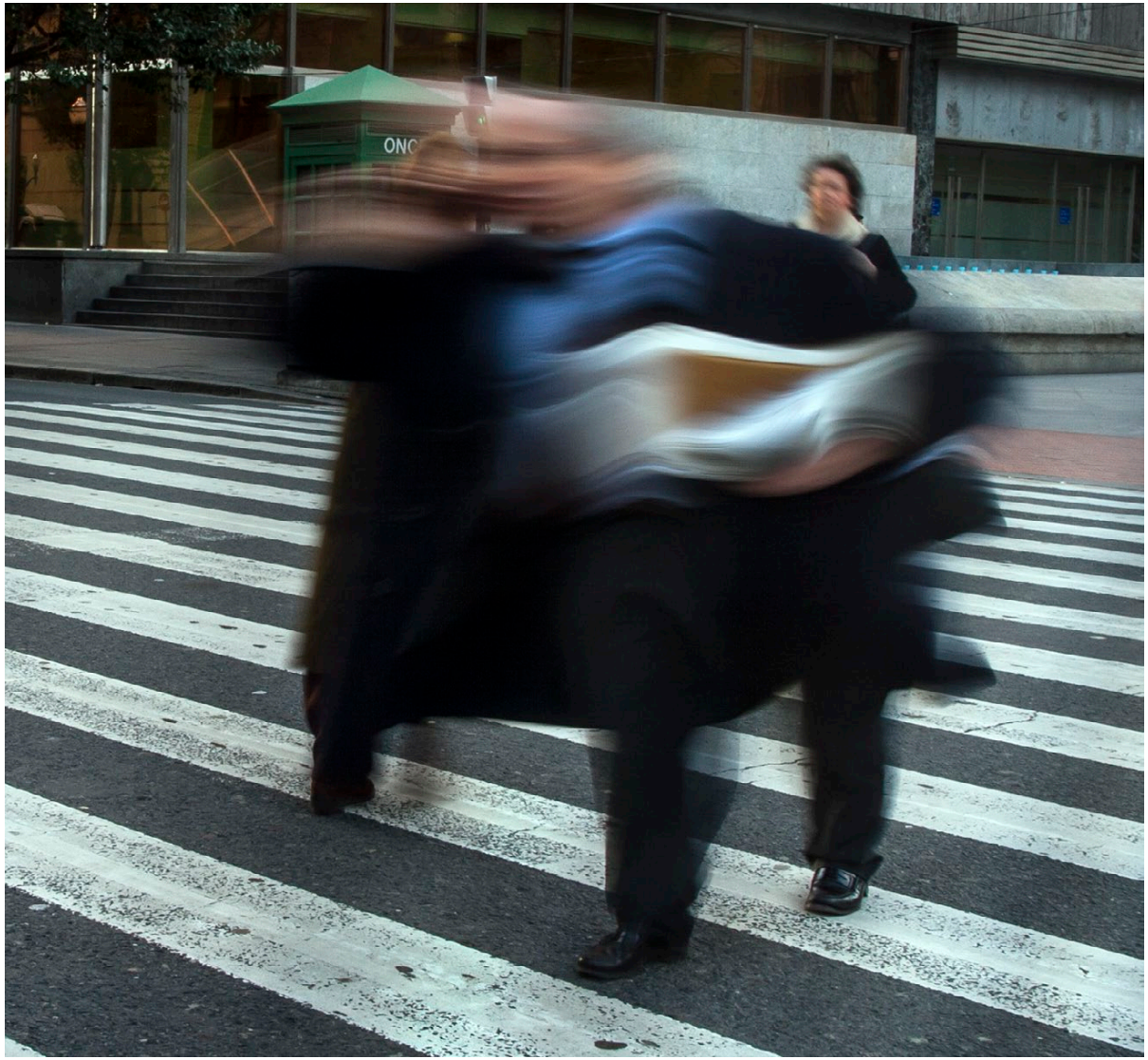
ONC

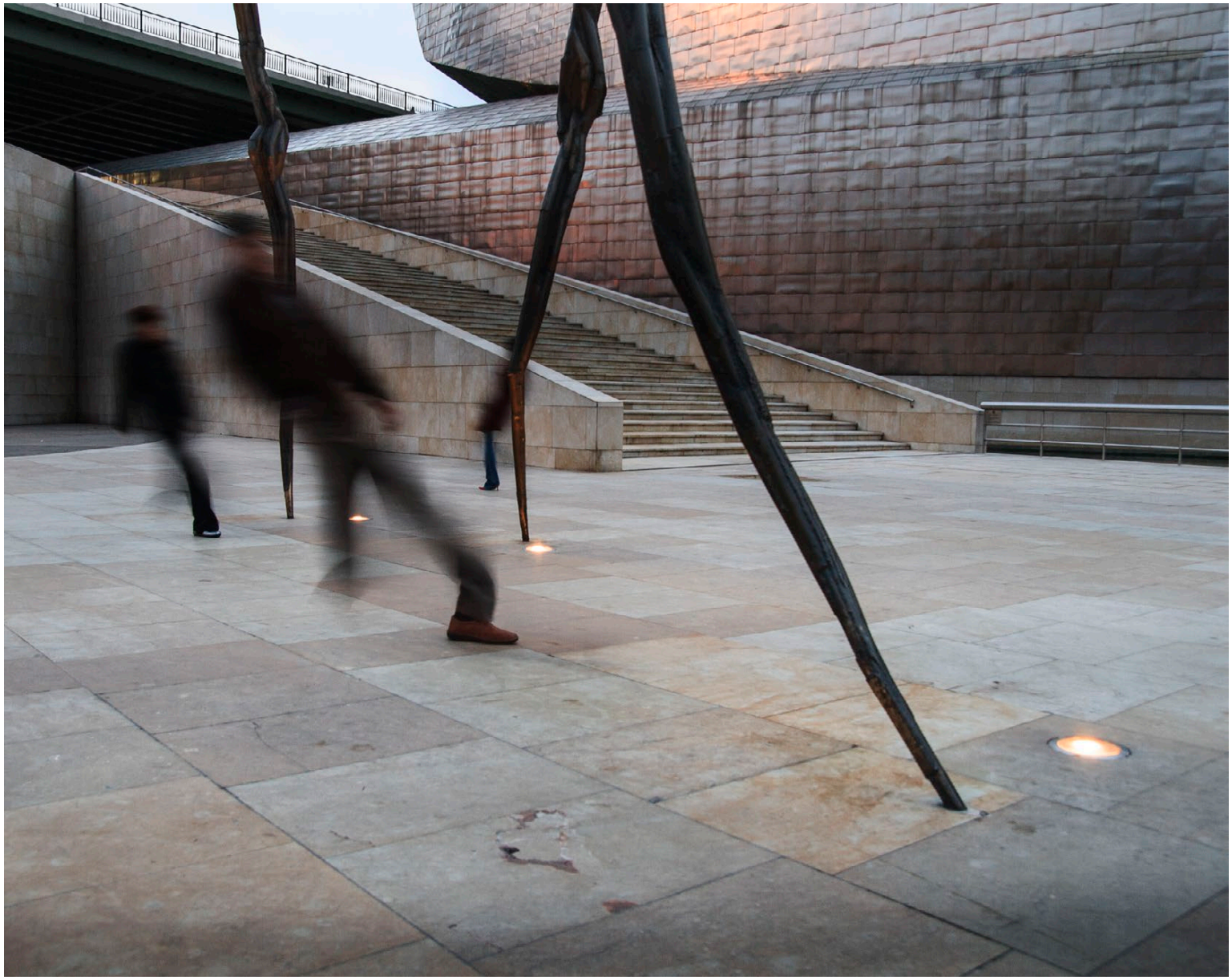

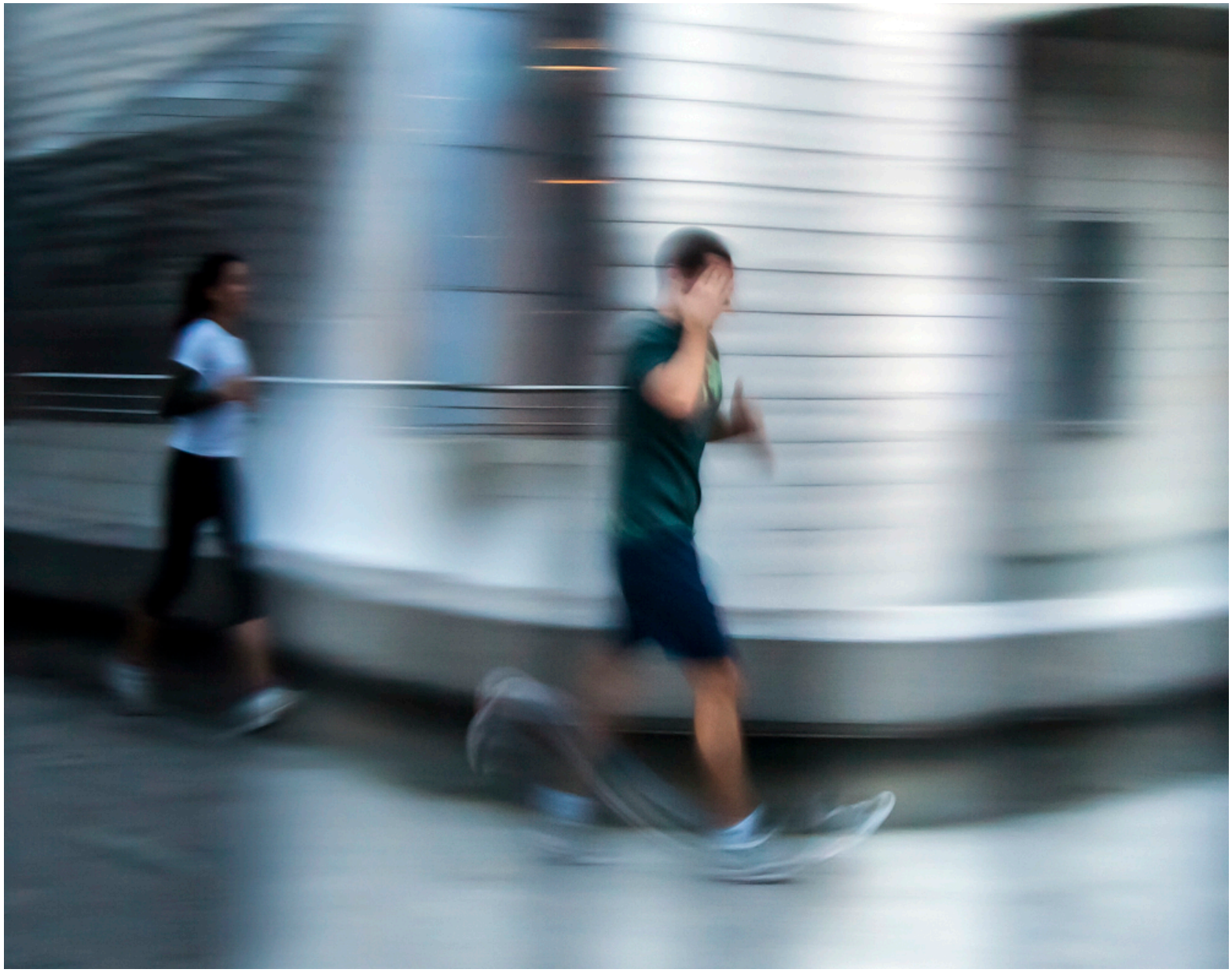

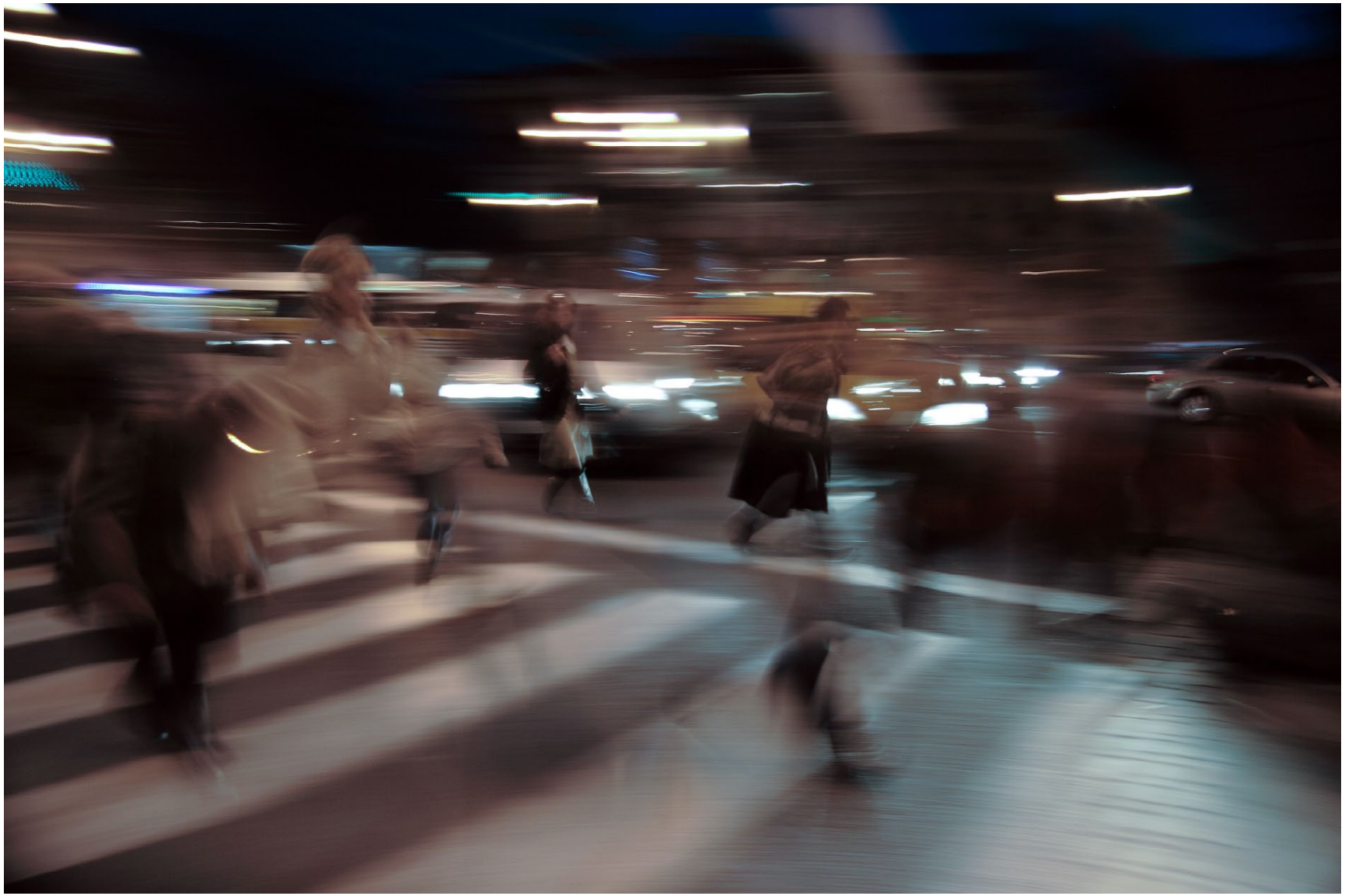

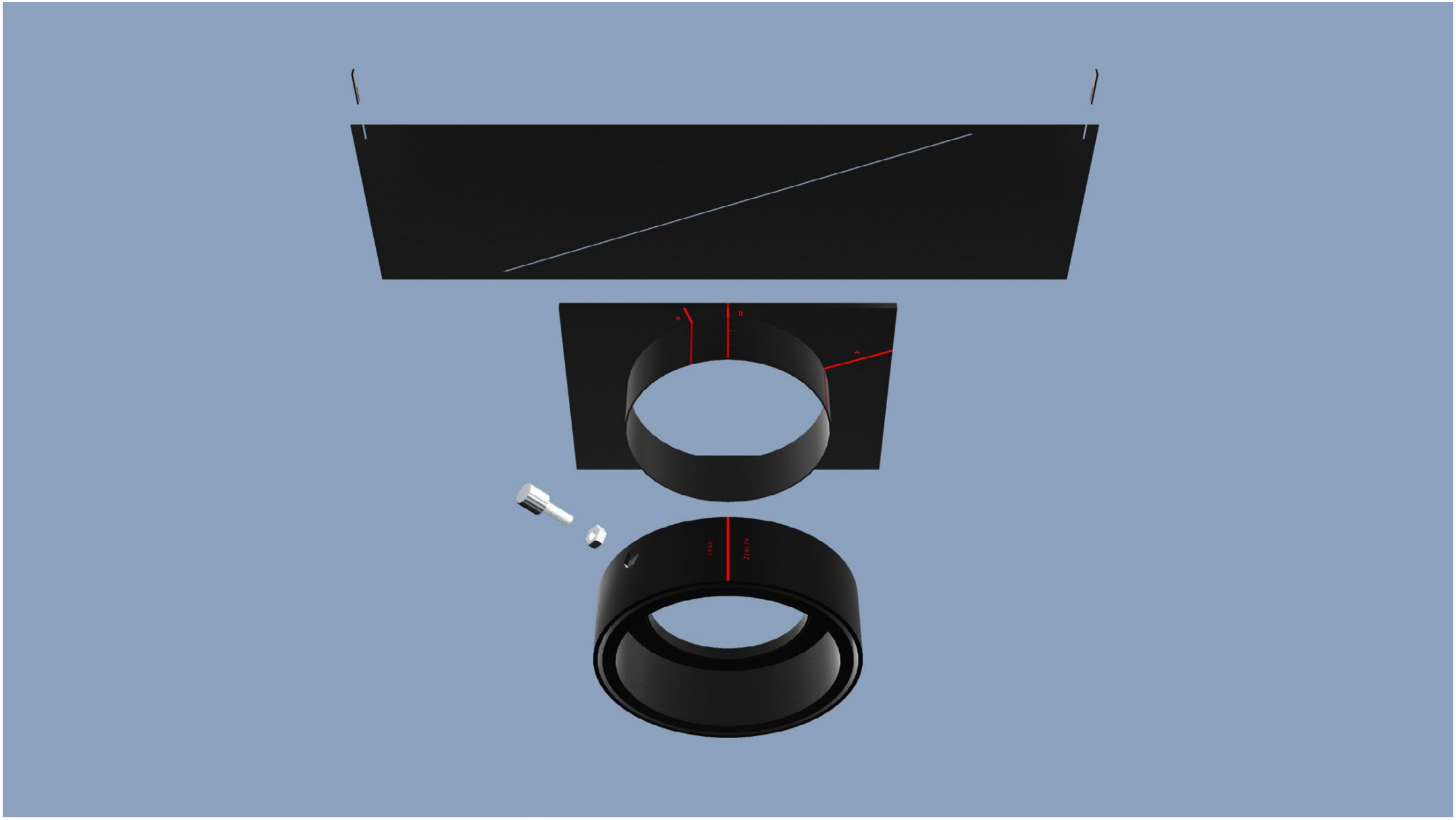
H
D
W
LENS
HOUSE

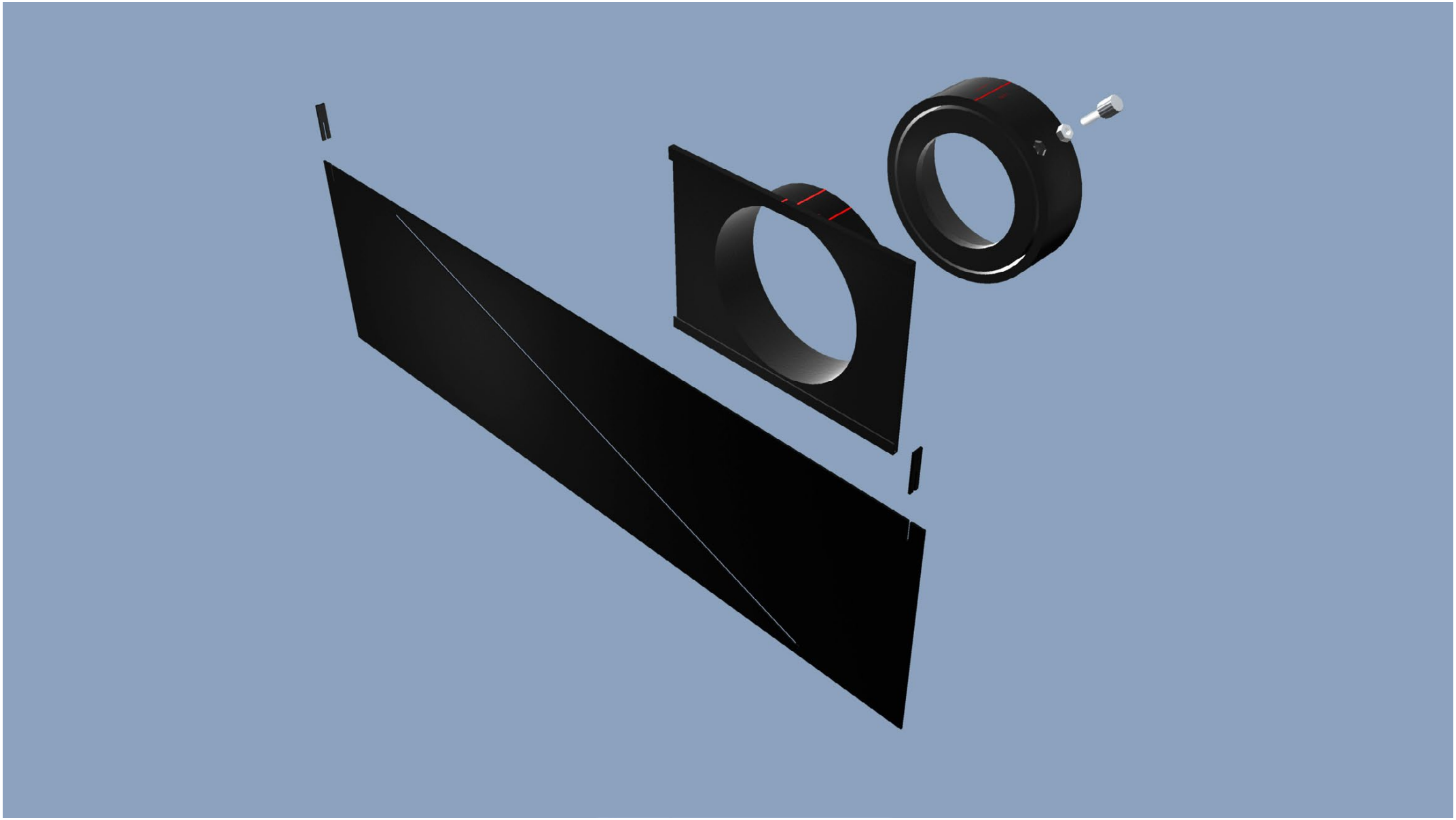

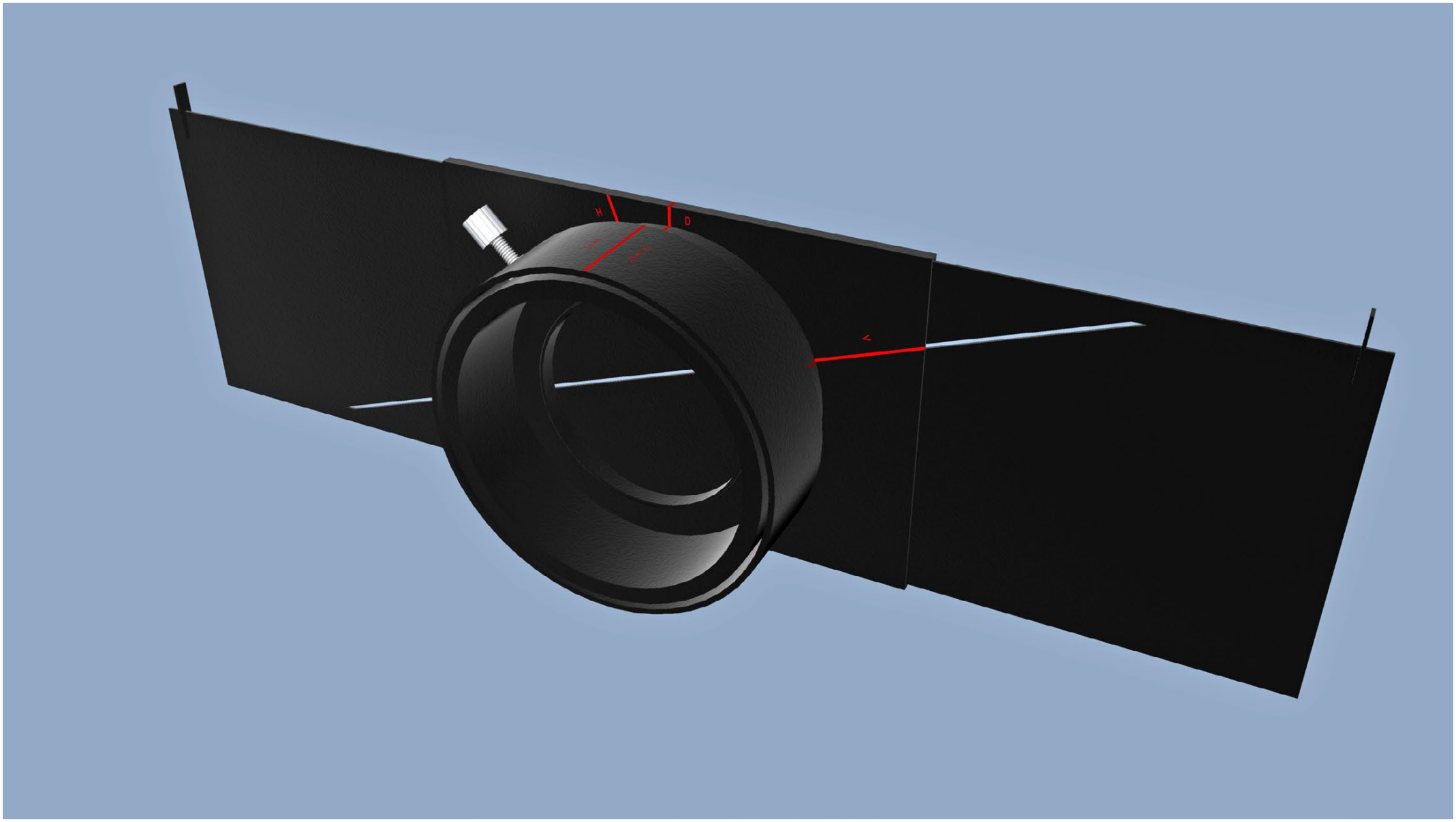
H
D
L

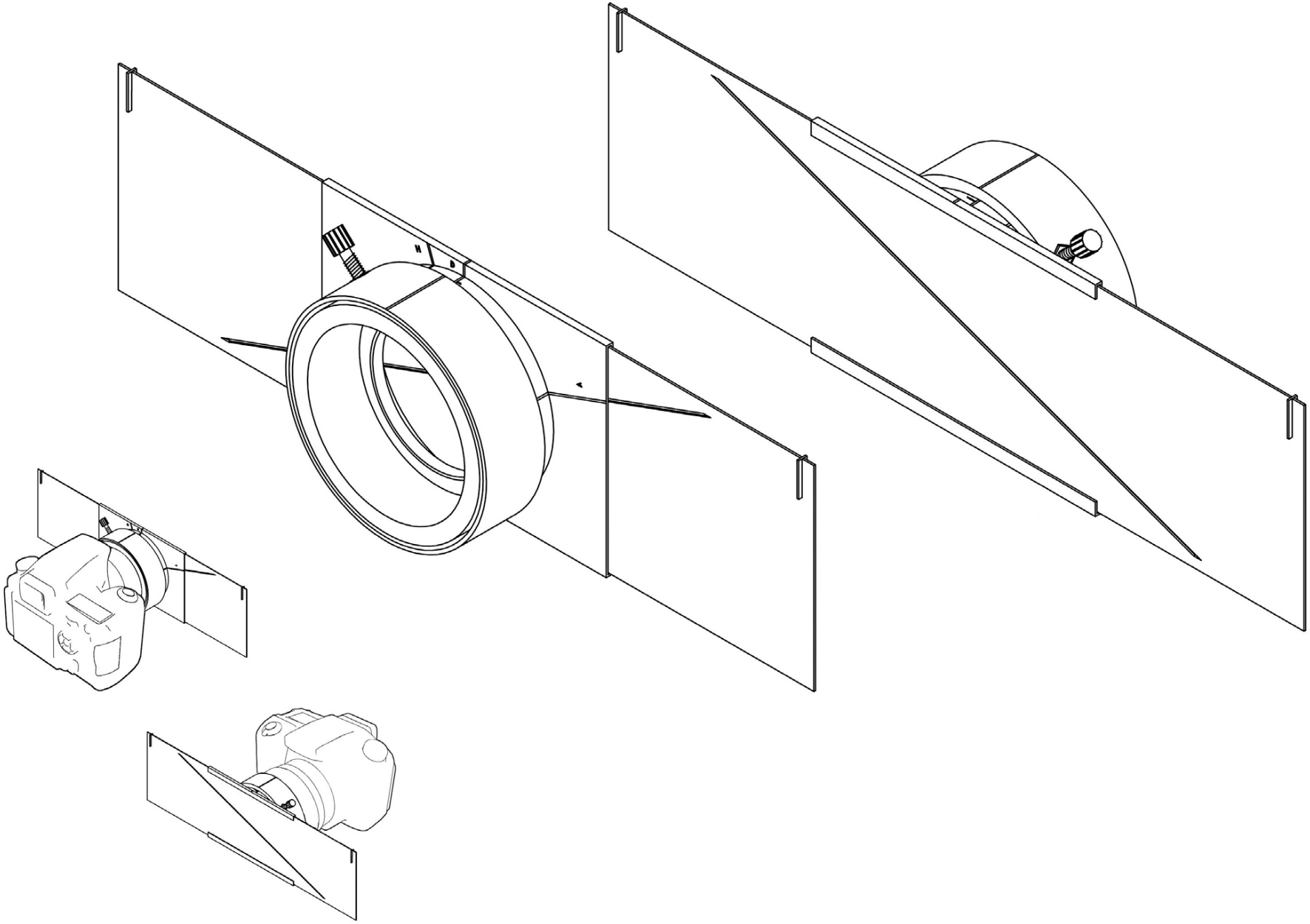

The device's ability to produce these effects is based on a luminance isolation structure with a front displaceable piece called "mobile plate" which has a narrow slit through which light from the scene passes, said groove projects a fringe of light that travels through the frame of the picture to finally produce a complete picture. The way that fringe interacts with moving subjects when we move the plate is what produces the effects of deformation of such subjects in the final photograph.

BASIC USE OF THE MOVESCAN

Next, we will describe a basic use which serves to understand how it works but in no case to be understood as limiting.

We place the camera on a tripod and select the function Bulb thereof (manual opening and closing of the shutter). Once installed and configured the device according to your preferences and focused the camera to the point of interest of the scene, the mobile plate is placed and moves to one of its safety stops where no light enters, in this case the left end of the movable plate, then preferably using a remote shutter release, press to open the camera shutter, and we're ready to move the mobile plate as we see fit. In the process, the strip of light projected by the mobile plate slit will have traveled the image capture surface. Once we get to the final safety position right end where light enters not, press again to close the shutter.

Should make test shots to make an estimate of how much we have to open the diaphragm or what ISO to use, or how fast we move the plate as these factors together with the thickness and consistency of the band of light are those who which ultimately determine that enters the total amount of light to get a well exposed photography.

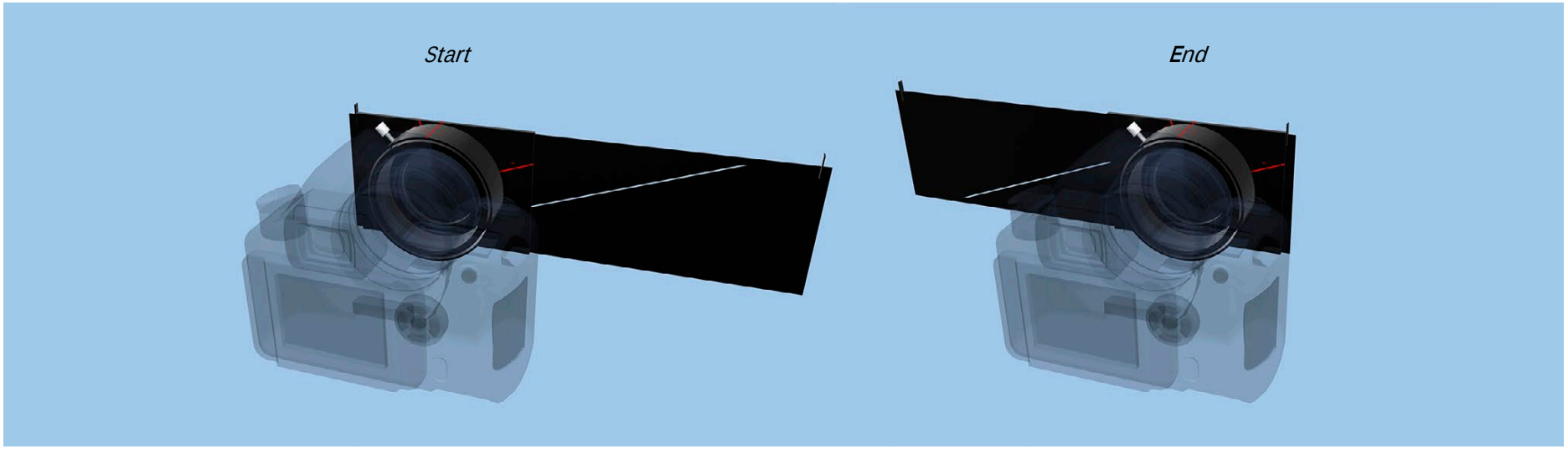

PRACTICAL DESCRIPTION OF THE DEVICE

The Movescan is composed of three basic modules:

1. Coupling piece to camera lens.

Is the bond interface between the device itself and the camera lens. By being equipped with male thread for filters it provides the universal character for use with any of these kind of lenses (using standard ring converters if it´s needed). It consists of a basically cylindrical piece and a locking screw and nut.

2. Swivel guide.

Place inserted in the previous piece by its circular tube base and can rotate 360 degrees. Once rotated to the desired angle can be locked in that position with locking present in the coupling piece to the lens. It has a rectangular shape with two guide canals so we can displace the rectangular piece called mobile plate.

3. Mobile plate.

Flat rectangular piece with a slit through which light enters from the scene towards the camera. The mobile plate is moved manually making use of the swivel guide.

I present different designs of mobile plates and slits suitable for the different effects that can be achieved.

Then we´ll explain each module in detail.

Coupling piece to camera lens.

Piece with a basic cylindrical ring-shaped which engages the photographic lens through a male thread located on the inner circle of the ring; this thread is inserted into the female thread present in these lenses. The piece has an extension in the direction of the camera dedicated to shelter an indent, cylindrical too, where the swivel guide can be inserted at different depths.

The coupling piece has an indication that we must ensure that it is in the highest part of the lens with the camera in a horizontal position; this mark has been called "Lens Zenith". At 45° to the left of the Lens Zenith mark, is the lock system with screw and nut. It consists of a perforation from the outer face of the coupling piece to the cylindrical indent for inserting the "swivel guide". This perforation is nut shaped on the outside and extends to the insertion indent adopting form of cylinder.

This form is intended to insert into it a nut that locks into the perforation and then a screw passes through the nut and comes in contact with the swivel guide. So we can fix the swivel guide in a determined position. It comes to avoiding that in the process of realizing the photo, when we displace the mobile plate, the swivel guide moves accidentally.

About the screw and nut lock system must be said that its location is designed for a speed and convenience of use with the left hand side just after handling the rotating guide with the right hand.

The space around the male threads of the coupling piece is the space dedicated to locating the photographic lens. This space should have enough room to fit not only the majority of lenses that are manufactured but also to make it accessible enough to the lens focus ring by the user once mounted the Movescan. It has sought a satisfactory solution between the economy of resources and accessibility that the user will have to focus ring but it is true that the design of photographic lenses is so varied that it is possible that the user may have to do the focus adjustments before attaching the Movescan.

Finally, the design of the piece presents another cylindrical indent outer and visible only from the back of the piece, its only function is to save material and lighten the piece.

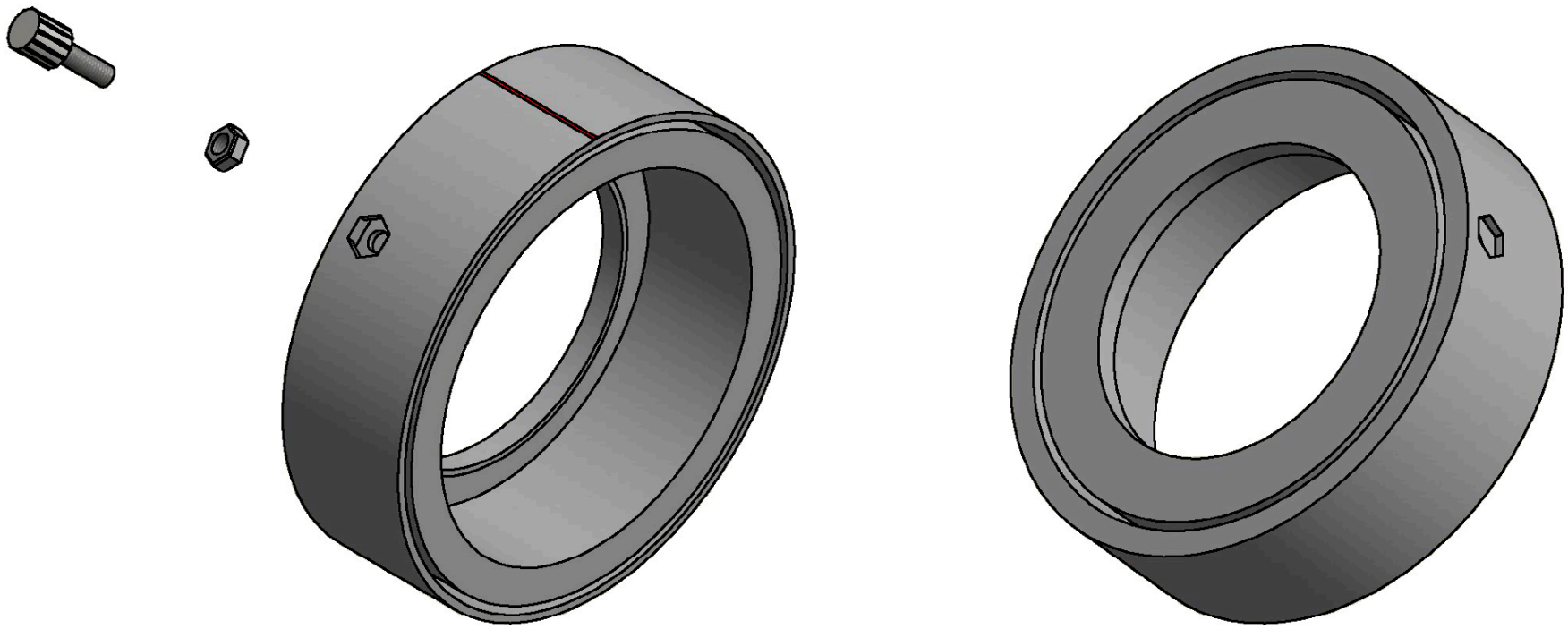

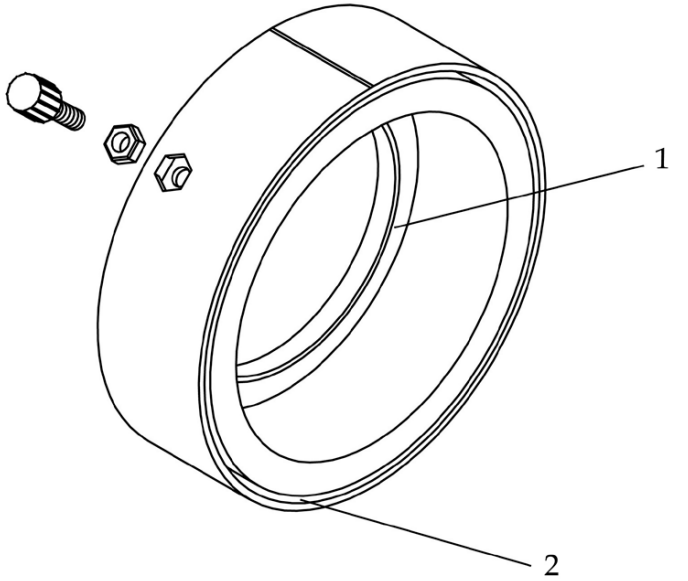

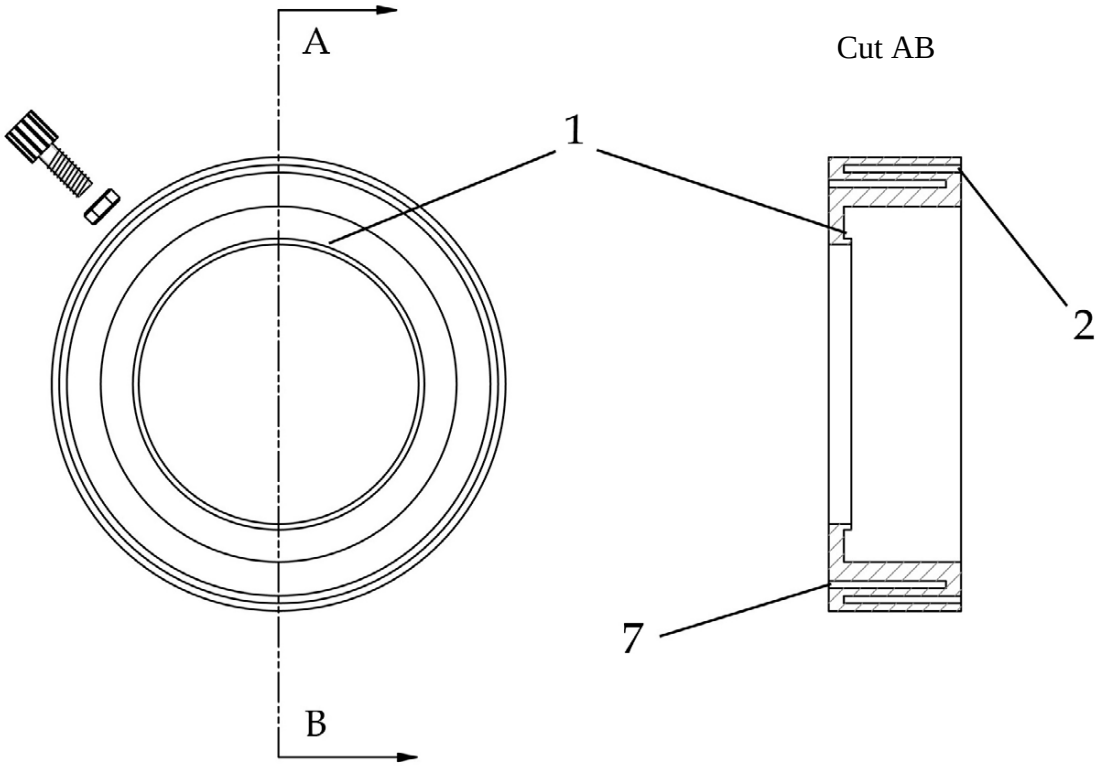

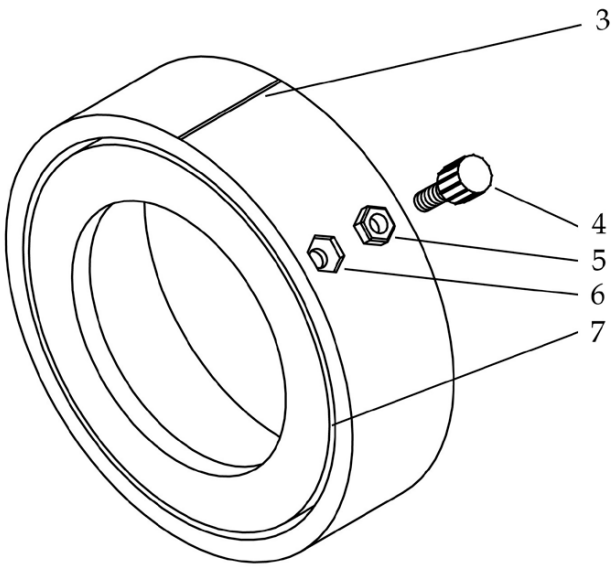

1. Male thread
2. Indent to lighten the piece
3. "Lens Zenith" mark
4. Locking Screw for the swivel guide
5. Locking nut
6. Perforation for embed locking nut and screw
7. Indent to insert the swivel guide

Swivel guide for the mobile plate.

It consists of one piece which on one side has a circular pipe form and on the other has rectangular shape with a circular hole in the middle which coincides with the union of pipe and rectangle. The tube-shaped part serves to insert the cylindrical part in the indent present in the front of the "coupling piece", and also to do so at different depths.

The rectangular portion of the piece presents at its greater sides two narrow folds in order to move through the inside thereof a rectangular plate which is called "mobile plate". The mobile plate is responsible for hosting the slit through which light enters the lens.
The reason for the capacity to rotate that has the guide is that depending on the effect we want to achieve and the qualities of the scene where we're working on, we may be interested that the sweep angle of the light line is diagonal, horizontal, vertical, or the angle we want.

In aid of this has been made marks D, H and V (diagonal, horizontal and vertical) to match them with the mark "Lens Zenith" of "coupling piece" that will give the certainty that the line of light will sweep the frame following those exact angles. Also presents some insertion depth marks that serve to remind the user which is the optimum depth chosen and see which is the maximum position in which the locking screw is making full contact with this piece.

The reason for the ability to insert at different depths on the "coupling piece" is that the appearance and consistency of the line of light when viewed through the camera varies greatly according to the focal length at which we are working, the distance between the slit and the front lens and the focusing distance we´re using. Keep in mind that most of the time we´ll work in a scene where the camera will be focused at an average distance, say 5 or 6 meters, while the light slit is almost touching the front lens.

For this and given the universality of Movescan, it is necessary to have some margin of adjustment to get a band of light that is sufficiently cohesive or faint and thin enough to get the effect we want, whether motion capture or light filtering effects.

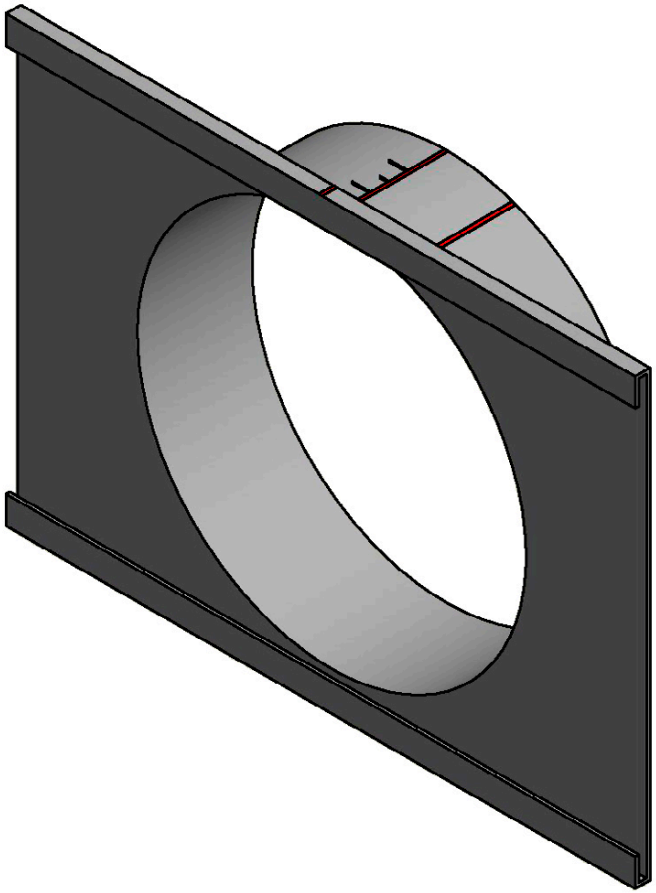

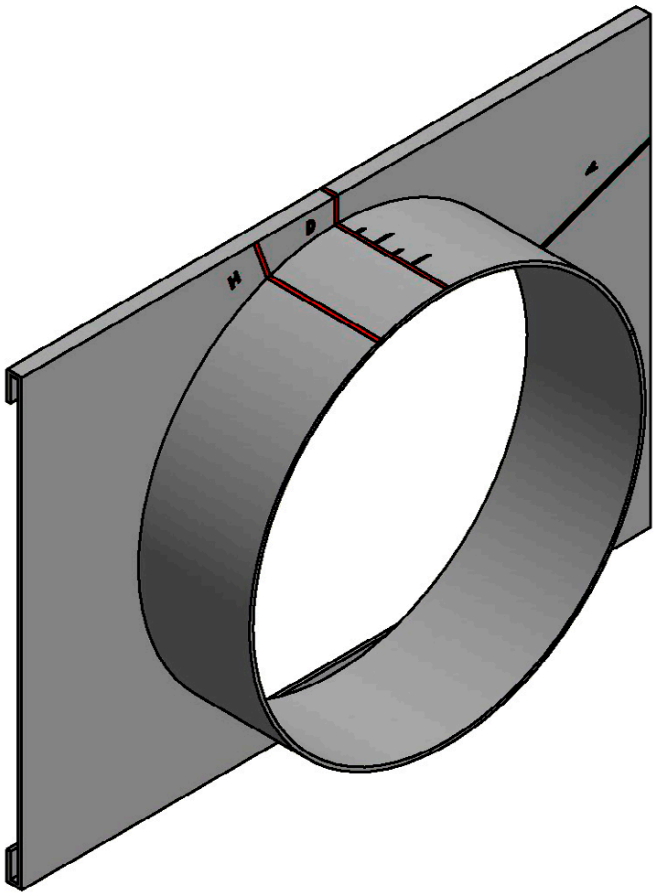
H
D

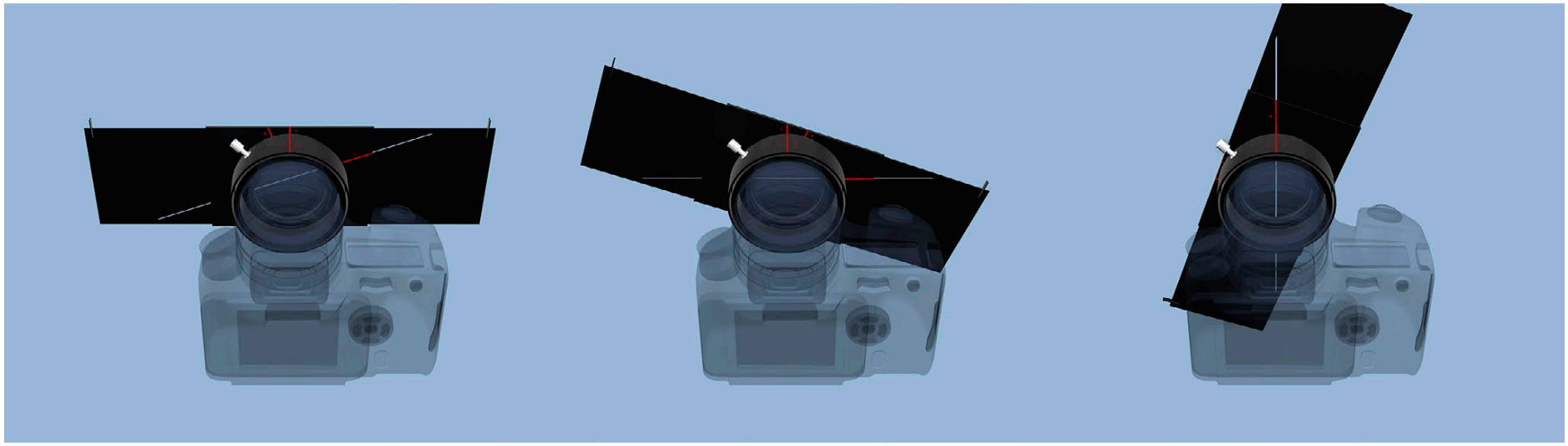

Turning positions: D H V

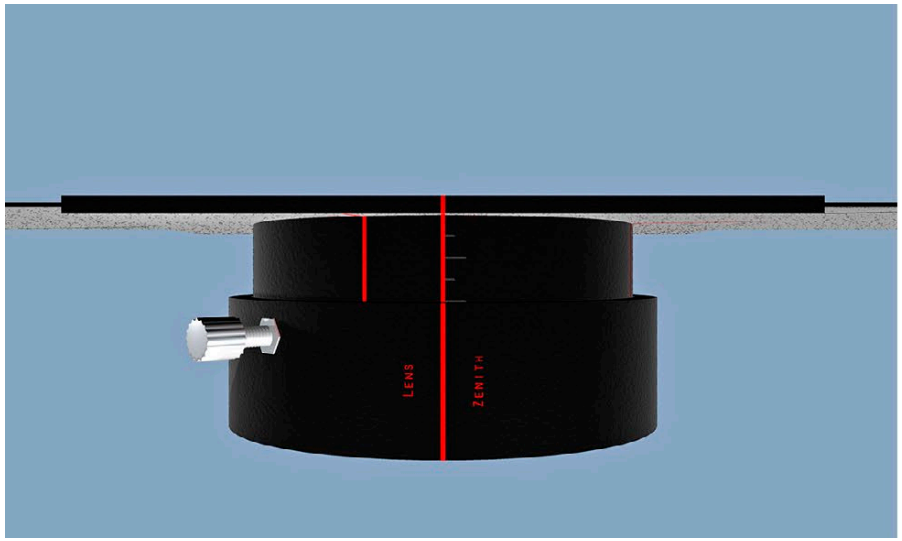

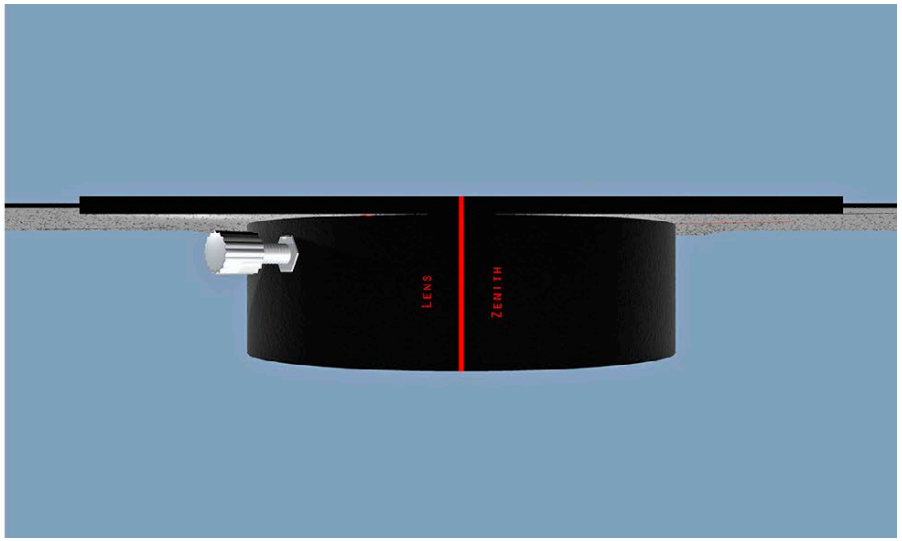

Depth of insertion of the swivel guide.

Mobile plate.

It is a flat rectangular piece elongated, solid character and completely opaque except for one slit (or more) formed therein through which passes the light from the scene.

This plate is moved manually sliding down the rectangular part of the swivel guide. Its function is to let light from the scene enter only through these slits, which project a beam of light that can sweep the entire area of the frame of the picture to produce a complete picture.
For the plate does not move so get out of the swivel guide by accident you can insert two locking tabs in separate slits near the ends of the piece.

The movement of this piece by the guide channels of the swivel guide is done manually in one direction or another according to our will. In the stop position on both sides ie where the locking tabs make contact with the swivel guide, the line of light is not on the frame, these positions should be considered as safety positions where no light enters and from which proceeds with exposure of the scene the way we see fit, knowing that the many different ways of moving this piece will produce different results in the image.

In order to produce motion capture effects its proposed a mobile plate whose light slit is diagonal in angle of 20° to the horizontal and passing through the center of the plate, thus coming from the good results obtained on experience with a prototype. Keep in mind that in the Movescan, the slit determines the qualities of the effect that can be obtained and can be designed numerous variations such as curved lines, pieces with multiple lines, irregular lines, geometric designs, etc.

As explain in the statement, the Movescan allows new forms of filtering light from a scene. The design variants of the mobile plate and the shape of the slit allow as explain below, achieving effects equivalent to using neutral degraded filters, neutral density filters and important advantages in the art of color filtering.

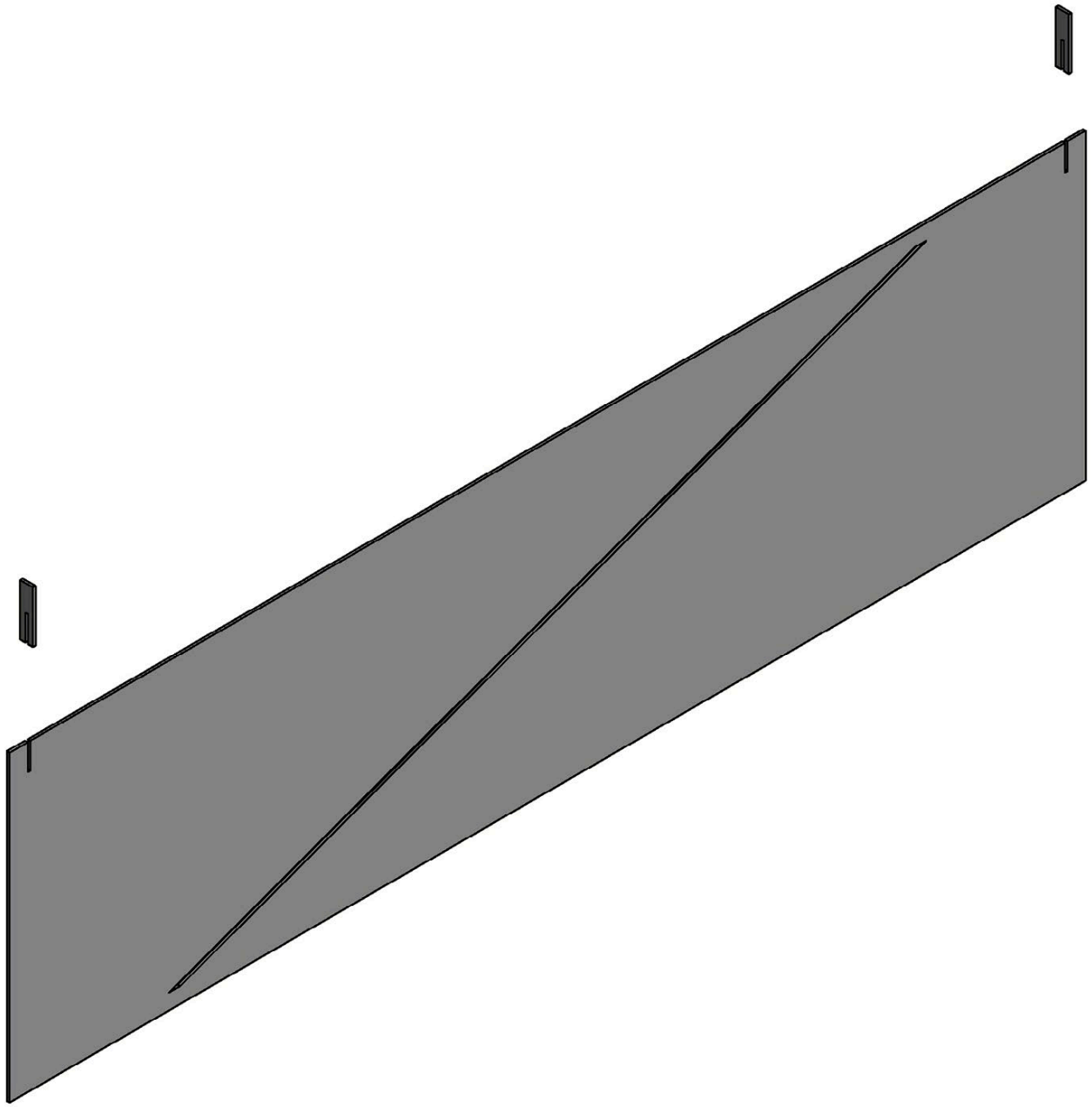

ADVANTAGES PROVIDED BY THE MOVESCAN

Advantages over the production of motion capture effects:

In photography, producing effects of deformation of the figures due to its movement is generally limited to those derived from use of a relatively long exposure time in which the figure covers a space on the surface of the frame during that time interval. The results are blurred figures with traces of the position of each part of this figure at any time in that period of time because the light is arriving to the sensor-negative simultaneously from the entire scene.

There is a technique commonly known as "slit-scan photography" which is based on the concept of scanning the scene through a single fringe. It is something that is used for example for "photo-finish" photography, and there are also some programs to produce videos of this kind digitally.

However, to SLR photography we have no notice of the marketing of a universal use device with the portability and simplicity of use of the one presented here and even less that provides those new and advantageous ways of filtering the light that we´ll explain later.

With the Movescan we can take pictures of scenes with moving subjects in a manual way and producing creative images in which their morphology becomes unstructured or transforms into abstract figures full of dynamism due to the interaction between Movescan´s movement and the movement of the subject.

The visual richness in terms of textures and recognizable details that remain moving figures photographed with Movescan is far superior to what you would get simply by making a long exposure photography in the classical manner in which the subject is completely blurred.

These effects are not reproducible in Photoshop or any other software because we could not electronically apply effects of displacement and deformation to the subjects while respecting the background on which they are, unless we get into laborious processes mixing several shots of the same scene.

Another concrete example of improvement over typical photographic technique we have for example in sweeping photography, in which the photographer moves the camera to follow the subject so it stays in the same position in the frame. If we combine this technique with using a Movescan, i.e. if in addition to moving light slit we move the camera to follow the subject, we get a more specific in its details and better isolation of the subject from the background.

From photo 19 onwards, the technique used has been to move the camera while moving the mobile plate, as we see, this can be oriented to improve sweep photographs (runner) or to produce abstract compositions where concretion in forms is lost in favor of a general feeling of movement.

Now we´ll discuss the issue of static scenes photography, landscape, urban, etc. With Movescan we can also take pictures of this type, we must keep in mind that everything that does not move is fixed in photography and undistorted, no matter that the light of a landscape has reached the sensor or negative through a mobile slit in a non-simultaneous way.

Advantages over neutral light filtering techniques:

Currently are used glass filters capable of attenuating the amount of light that enters the lens, are neutral density filters. These can be of variable opacity, such as the gradient filters, which attenuate the amount of light passing through the filter in some parts more than others. There are also constant neutral density filters whose function is to attenuate all light that enters the camera lens alike.
The Movescan can perform functions equivalent to these two kinds of filters without using tinted glass, just using certain light slit forms as explained in the following examples:

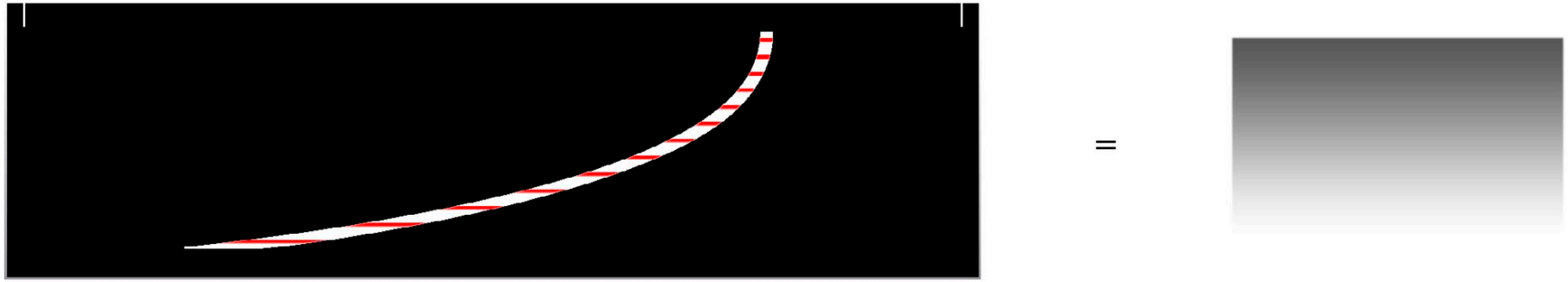

Here is how a slit curve-shaped like the illustration, is equivalent to using a gradient ND filter glass that had a high attenuation of light in the top and this was falling down; considering red horizontal lines drawn within the slit as the time interval during which light comes from the scene to the image capturing surface while the opaque surface with slit moves horizontally; see that as we go down in the frame, the stripes are getting longer, meaning that the sensor is receiving increasing light from the scene, thereby achieving the equivalent effect of the gradient filter.

Using this slit form, we see how it achieves an effect equivalent to the above using a slit that has a certain constant variation of width along thereof.

And in the third we see as if the slit has an irregular increase of width, in this case located in the center, we can obtain the equivalent effect of using a gradient filter that has its maximum attenuation at the top, the area of transition in the center and below the minimum attenuation.
Should be noted that these principles refer to the increase of the amount of light in the frame; the absolute value of the exposure would be given by the speed at which we move the mobile plate. With these principles can be designed great multitude of variants.

In the following pictures the Movescan has been used as neutral gradient filter by use of a parabolic curve-shaped slit as the first of the three examples above:

Without Movescan, 1/400 f 8.

With Movescan and curved slit, 3" f 8.

I provide exposure data for informational reasons but it should be noted that in photographs taken with Movescan, Bulb exposure time is the time between the initial safety position and the end safety position, not necessarily the time that it took to move the mobile plate. The speed with which we should move the mobile plate will know doing some testing and I can say based on experience that this is a simple task.

Without Movescan, 1/125 f 11.

With Movescan and curved slit, 3” f 11.

Without Movescan, 1/25 f 8.

With Movescan and curved slit, 3" f 8.

Here we see how useful has been the device to prevent that the sky was burned in the photography of this scene of high contrast lighting.
We see as without Movescan (or a gradient filter) could not expose for rock lower area without losing the detail of the sky.

Advantages over color filtering techniques:

Currently are used plenty of different color filters to produce color effects of all kinds, and attenuation effects or highlight of the parties with certain color ranges in order to produce black and white photos, (e.g. red filter for darken the blue sky on a black and white photo).
All these filters have in common that must be large enough to cover the entire frame showed by the lens.
With Movescan is enough make a filter that covers nothing but the slit through which light enters, resulting in a significant saving of the material required.

To perform color filtering is proposed a vertical light slit, which has in the ends thereof threaded male protrusions, in said protrusions, can be inserted a piece composed of various color filters in the form of strips glued to supports that have holes located above and below said strips, in order to insert the piece in the male protrusions. In this way we match the color filter we want with the light slit and then we fix the piece with two nuts that are screwed into the male protrusions.

The variety of strip-shaped filters with which we could constitute this piece is enormous.

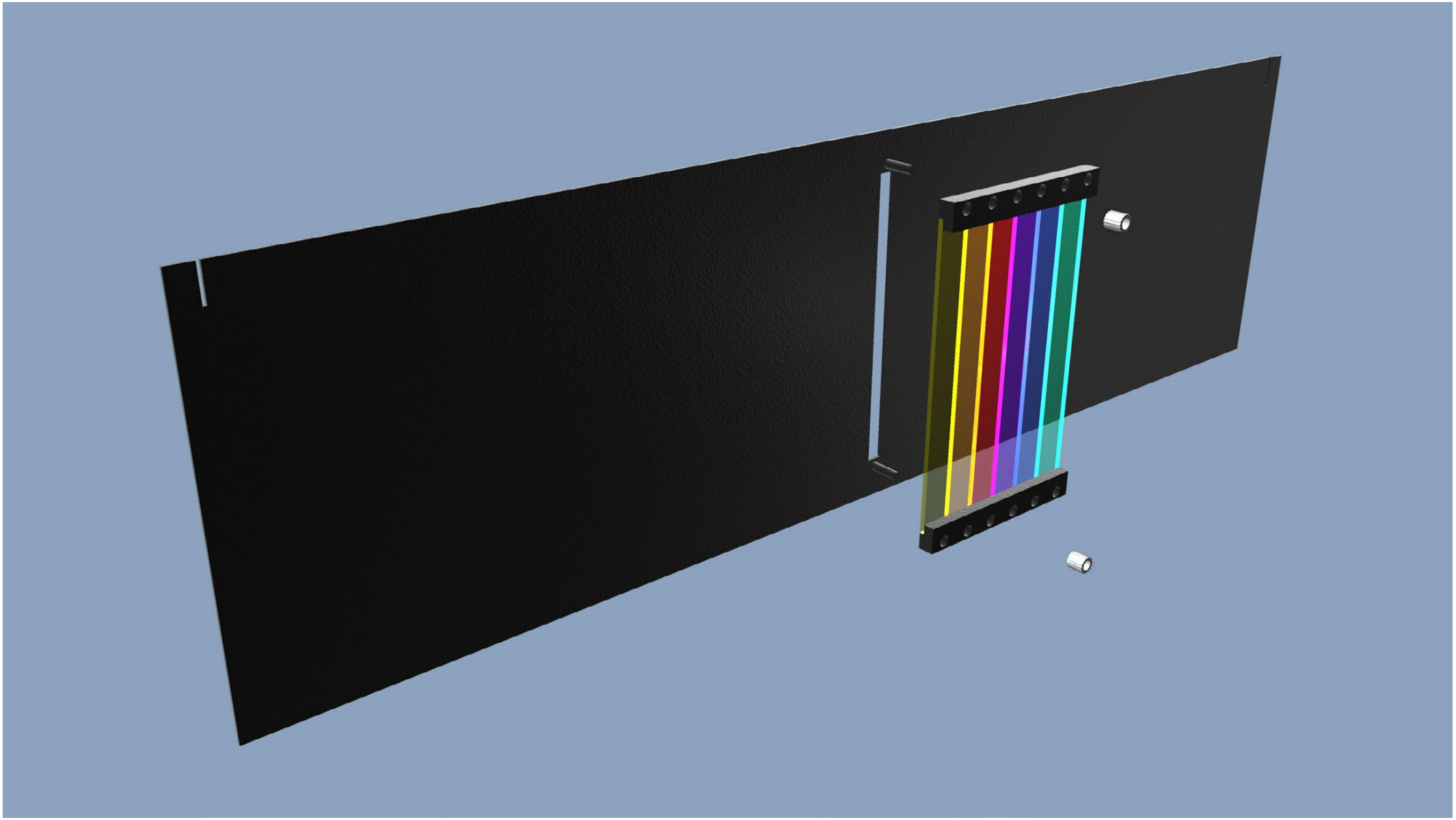

Advantages over multiple exposure techniques:

Performing multiple exposures is something easy to do with the old film SLR cameras, simply not to replace the negative and do multiple takes on it.

With DSLRs is not so easy, not all let multiple exposures to produce a single Raw and those that allow it usually limit the user to a certain number of exposures. With Photoshop software and adding layers processing can be simulated this effect but has the disadvantage of being much more laborious and the end result is not an original camera Raw file, with the implications this has for example participation in photo contests, which often penalize further processing of photographs and reward original Raw file. Note also that Raw files have all the information and quality of the camera is capable while any image processed with Photoshop will have a certain degree of quality loss.

With Movescan we can do the number of exposures that we want for the same photography with any camera as each pass of the band of light produces a different exposure that adds to the above.
In the photographs of pages 7, 16 and 17 we can see examples of simple double exposure combined with the effects of motion capture, we observe how the figures let see the stairs behind them because sometime in process there was a capture of the scene when the figure was not in them.

Then we will see how the Movescan in certain low light conditions like dawn or sunset can be used like a neutral density filter, but achieving this effect using multiple exposure:

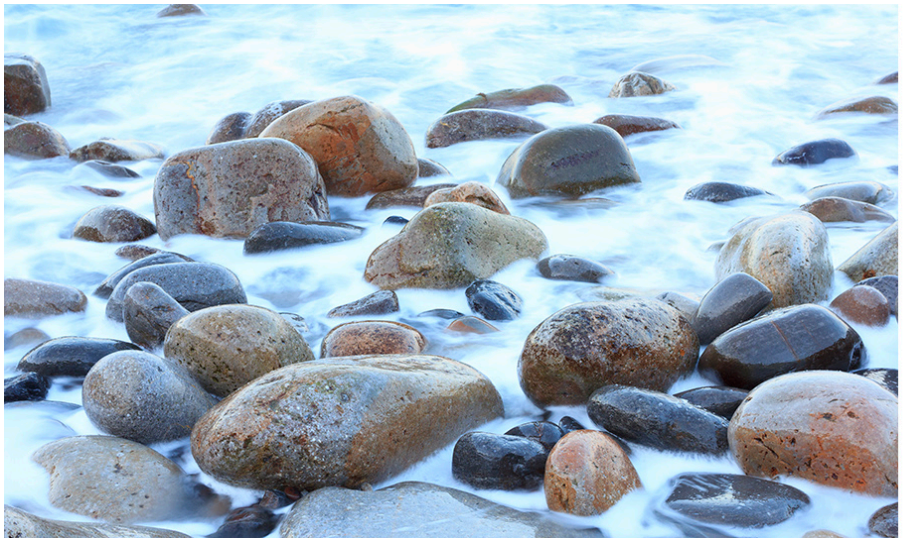

Without Movescan, 0,8" f 9.

With Movescan and normal slit, 24" f 9.

In this photograph, the device has been used to achieve an emulation of neutral density filter using a multiple exposure process. During the 24 seconds that lasted the shooting were performed about 20 passes of the mobile plate i.e. that have mixed 20 different exposures to form the final image. The result is quite similar to what we would get if we had used a ND 400 filter type for example. We said before that this technique needed to tenuous light conditions because if we want to form an image from many exposures we need each one to supply relatively little light to the sum of them produce an image with correct brightness.

Without Movescan, 0,4" f 9.

With Movescan and curved slit, 20" f 9.

In this picture, two concepts have been mixed, first emulating a ND filter by using a curved slit, which have achieved darken the sky and brighten the rocks. And secondly multiple exposure, performing as in the previous example 20 passes of the mobile plate, which contained said curved slit, we achieved the effect of the water mist by addition of many takes.

Advantages over passive protection function of the front element of the lens:

If we think of an element that protects the main frontal lens while allows taking pictures we should cite the general glass filters, but these filters are themselves fragile and easily susceptible to get dirty by environmental elements, diminishing their capabilities.
With Movescan the front lens is well protected from the elements (rain, splashing, etc.); as the only path to the exterior is the slit of the mobile plate which is separated from the lens at a distance which is variable by user decision. It is also a device that is not affected by these environmental elements for proper operation, with the tranquility it means for the photographer.

As we have seen, the Movescan is a simple to build device that gives the photographer many new creative capabilities.

The production of effects of deformation and transformation of moving subjects and the many advantages described in the techniques of light filtering make this device be of interest to any amateur or professional photographer. Furthermore the fields of photography where we can presuppose its usefulness are very varied: action, portrait, urban, landscape, sport, entertainment, dance, art photography, etc.

The manual nature of its use returns to the photographer the pleasure of doing things with his own hands. And the exercise of imagination that means thinking about how to use the device with the scene that is in front of the camera is also very stimulating for the photographer who always wants to get new results in their works.

MOVESCAN

Fernando Álvarez Charro

Patent pending.

fernandocharro@hotmail.com

Telf. 627418161